Analog Engineer's Circuit

Buffer (Follower) Circuit

Pete Semig

Design Goals

Input		Output		Freq.	Supply	
V_{iMin}	V_{iMax}	V_{oMin}	V_{oMax}	f	V_{cc}	V_{ee}
–10V	10V	–10V	10V	100kHz	15V	–15V

Design Description

This design is used to buffer signals by presenting a high input impedance and a low output impedance. This circuit is commonly used to drive low-impedance loads, analog-to-digital converters (ADC) and buffer reference voltages. The output voltage of this circuit is equal to the input voltage.

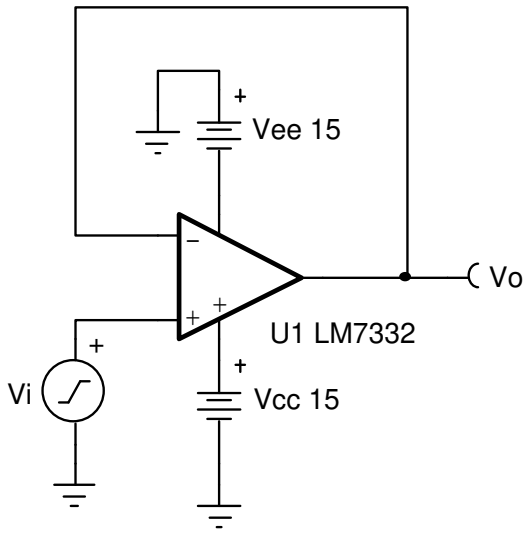

Design Notes

1. Use the op-amp linear output operating range, which is usually specified under the A_{OL} test conditions.
2. The small-signal bandwidth is determined by the unity-gain bandwidth of the amplifier.
3. Check the maximum output voltage swing versus frequency graph in the data sheet to minimize slew-induced distortion.
4. The common mode voltage is equal to the input signal.
5. Do not place capacitive loads directly on the output that are greater than the values recommended in the data sheet.
6. High output current amplifiers may be required if driving low impedance loads.
7. For more information on op-amp linear operating region, stability, slew-induced distortion, capacitive load drive, driving ADCs, and bandwidth, see the *Design References* section.

Copyright © 2024 Texas Instruments Incorporated

Design Steps

The transfer function for this circuit follows:

$$V_o = V_i$$

1. Verify that the amplifier can achieve the desired output swing using the supply voltages provided. Use the output swing stated in the A_{OL} test conditions. The output swing range of the amplifier must be greater than the output swing required for the design.

   $$-14V \leq V_o \leq 14V$$

   - The output swing of the LM7332 using ±15V supplies is greater than the required output swing of the design. Therefore, this requirement is met.
   - Review the Output Voltage versus Output Current curves in the product data sheet to verify the desired output voltage can be achieved for the desired output current.
2. Verify the input common mode voltage of the amplifier is not violated using the supply voltage provided. The input common mode voltage range of the amplifier must be greater than the input signal voltage range.

   $$-15.1 \quad V \leq V_{icm} \leq 15.1 \quad V$$

   - The input common-mode range of the LM7332 using ±15V supplies is greater than the required input common-mode range of the design. Therefore, this requirement is met.
3. Calculate the minimum slew rate required to minimize slew-induced distortion.

   $$SR > 2 \times \pi \times Vp \times f = 2 \times \pi \times 10V \times 100kHz = 6.28V/\mu s$$

   - The slew rate of the LM7332 is 15.2 V/µs. Therefore, this requirement is met.
4. Verify the device has sufficient bandwidth for the desired output signal frequency.

   $$f_{signal} < f_{unity}$$

   $$100kHz \quad < 7.5MHz$$

   - The desired output signal frequency is less than the unity-gain bandwidth of the LM7332. Therefore, this requirement is met.

Design Simulations

DC Simulation Results

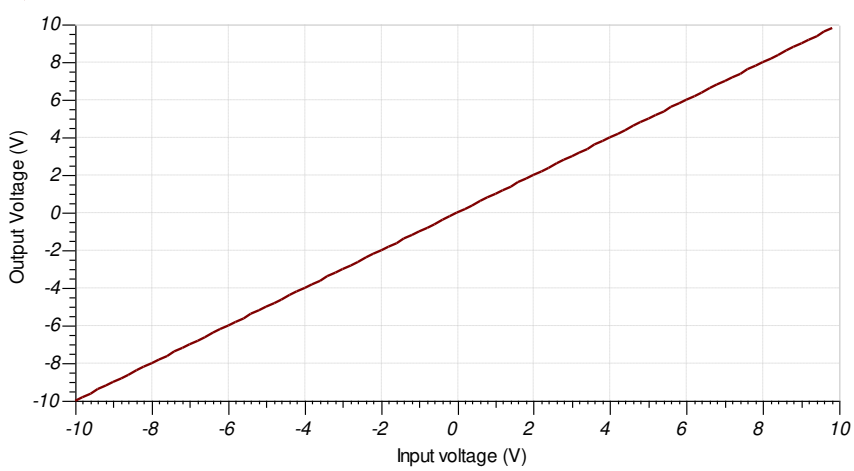

Copyright © 2024 Texas Instruments Incorporated

AC Simulation Results

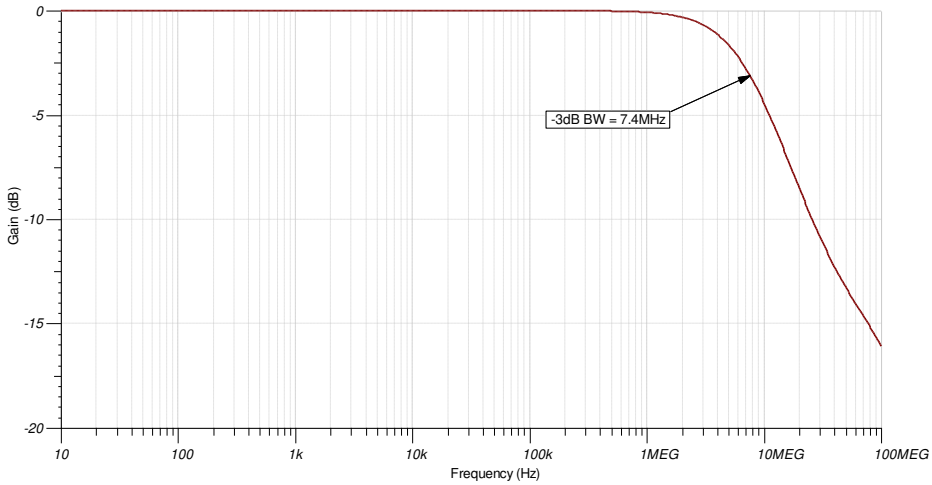

Design References

Texas Instruments, *Capacitive Load Drive Verified Reference Design Using an Isolation Resistor*, TIPD128 verified design

Texas Instruments, *Simulation for Buffer (Follower) Circuit*, SBOC491 software tool

Design Featured Op Amp

LM7332	
V_{ss}	2.5V to 32V
V_{inCM}	Rail-to-rail
V_{out}	Rail-to-rail
V_{os}	1.6mV
I_q	2mA
I_b	1µA
UGBW	7.5MHz (±5V supply)
SR	15.2V/µs
#Channels	2
LM7332	

Design Alternate Op Amp

OPA192	
V_{ss}	4.5V to 36V
V_{inCM}	Rail-to-rail
V_{out}	Rail-to-rail
V_{os}	5µV
I_q	1mA
I_b	5pA
UGBW	10MHz
SR	20V/µs
#Channels	1, 2, and 4
OPA192	

Copyright © 2024 Texas Instruments Incorporated

The following device is for battery-operated or power-conscious designs outside of the original design goals described earlier, where lowering the total system power is desired.

LPV511	
V_{ss}	2.7V to 12V
V_{inCM}	Rail-to-rail
V_{out}	Rail-to-rail
V_{os}	0.2mV
I_q	1.2µA
I_b	0.8nA
UGBW	27KHz
SR	7.5V/ms
#Channels	1
LPV511	

Trademarks

All trademarks are the property of their respective owners.

Revision History

NOTE: Page numbers for previous revisions may differ from page numbers in the current version.

Changes from Revision A (January 2019) to Revision B (September 2024) **Page**

- Updated the format for tables, figures, and cross-references throughout the document 1

Changes from Revision * (February 2018) to Revision A (January 2019) **Page**

- Downscale title. Added LPV511 table in the *Design Alternate Op Amp* section.....1

Copyright © 2024 Texas Instruments Incorporated

IMPORTANT NOTICE AND DISCLAIMER

TI PROVIDES TECHNICAL AND RELIABILITY DATA (INCLUDING DATA SHEETS), DESIGN RESOURCES (INCLUDING REFERENCE DESIGNS), APPLICATION OR OTHER DESIGN ADVICE, WEB TOOLS, SAFETY INFORMATION, AND OTHER RESOURCES “AS IS” AND WITH ALL FAULTS, AND DISCLAIMS ALL WARRANTIES, EXPRESS AND IMPLIED, INCLUDING WITHOUT LIMITATION ANY IMPLIED WARRANTIES OF MERCHANTABILITY, FITNESS FOR A PARTICULAR PURPOSE OR NON-INFRINGEMENT OF THIRD PARTY INTELLECTUAL PROPERTY RIGHTS.

These resources are intended for skilled developers designing with TI products. You are solely responsible for (1) selecting the appropriate TI products for your application, (2) designing, validating and testing your application, and (3) ensuring your application meets applicable standards, and any other safety, security, regulatory or other requirements.

These resources are subject to change without notice. TI grants you permission to use these resources only for development of an application that uses the TI products described in the resource. Other reproduction and display of these resources is prohibited. No license is granted to any other TI intellectual property right or to any third party intellectual property right. TI disclaims responsibility for, and you will fully indemnify TI and its representatives against, any claims, damages, costs, losses, and liabilities arising out of your use of these resources.

TI’s products are provided subject to TI’s Terms of Sale or other applicable terms available either on ti.com or provided in conjunction with such TI products. TI’s provision of these resources does not expand or otherwise alter TI’s applicable warranties or warranty disclaimers for TI products.

TI objects to and rejects any additional or different terms you may have proposed.

Mailing Address: Texas Instruments, Post Office Box 655303, Dallas, Texas 75265
Copyright © 2024, Texas Instruments Incorporated